Experimental investigations of an efficient electric pump source for Blumlein-based TEA nitrogen laser

[1]Mukhtar Hussain*, Tayyab Imran

Abstract:
We presented design, development, and optimization of the high voltage power supply as an electrical pump source for the generation of coherent ultraviolet pulses from the efficiently constructed transversely excited atmospheric (TEA) nitrogen laser. The coherent ultraviolet pulses generated by producing the electric discharge in the air in the laser discharge channel which made by the Aluminum electrodes on the double-sided PCB (Printed Circuit Board) copper plates which act as capacitors to form the Blumlein circuit. The behavior of parallel plate capacitors and high voltage supply investigated during laser operation. The developed TEA nitrogen laser has capacitance and Corona preionization quite lower than earlier investigations. The emission coherent ultraviolet pulses of the nitrogen laser characterized and confirmed by using photodiode and spectrometer. We have measured the nitrogen laser pulse and spectrum. We averaged over many pulses to acquire the smoother spectrum of the TEA nitrogen laser.

Index Terms: High voltage power supply, Flyback transformer, Electric pump source, Blumlein circuit, Ultraviolet pulses, Nitrogen laser, TEA Nitrogen laser

1 INTRODUCTION

THE high voltage power supply used as an electric pump source for the generation of laser pulses at atmospheric pressure in the discharging circuits of TEA nitrogen laser [1], [2], [3], [4]. Such electric pump sources have the low current and high voltage at the output ranging from 5 kV to 30 kV [1], [2], [3]. The Blumlein based nitrogen laser has very useful and promising applications, such as plasma study in nanoscale, material deposition, medicines, and dye thin film deposition [5], [6], [7], [8], [9], [10], [11]. Thati [12] demonstrated the oscillatory behavior of current, voltage of Blumlein laser circuit and the effect of time-dependent resistance and inductance of spark gap on nitrogen laser performance. Zhao et al. [13] and Aboites et al. [14] studied and described a variation of resistance and inductance of laser channel and the spark gap inductance. Han et al. [16] and Liu et al. [17] described the properties of discharge evaluation of Blumlein based pulsed laser and multiple switching Blumlein generator. Further, Blumlein based pulse source analysis, parametric analysis of Blumlein nitrogen laser and atmospheric pressure plasma treatment at nanosecond investigated by employing high voltage source [18], [19], [20]. The time-dependent inductance and resistance of free running spark gap of Blumlein based nitrogen laser for various resistive phase periods described [12], [15] to observe the oscillatory behavior of voltage across spark gap and laser discharge channel.

In the reported work, we have enhanced and improved the efficiency of our previous research [21] in the development of TEA nitrogen laser and an electrical pump source. We have improved and developed the stable high voltage power supply which used as a pump source for the TEA nitrogen laser. The optimization of various parameters perceived by fine tuning of the high voltage power supply. In contrast to our previous research, we have used the copper plates of double sided PCB (Printed Circuit Board) as parallel plate capacitors in the construction of TEA nitrogen laser. Subsequently, copper based parallel plate capacitor oscillating on the Blumlein configuration employed to generate the ultraviolet coherent pulses at the atmospheric pressure in TEA nitrogen laser. In the present design configuration of low capacitance, the pre-corona ionization in the laser discharge channel achieved at a lower height than reported earlier [21], [22], [23] which pioneer work in its nature.

Department of Physics & Astronomy, College of Science, King Saud University, 11541 Riyadh, Saudi Arabia
*awanchep@gmail.com

2 DEVELOPMENT OF HIGH VOLTAGE PUMP SOURCE FOR TEA NITROGEN LASER

The block diagram of the high voltage pump source shown in Fig 1(a), starting from regulated low voltage power supply (12-15) V, a high current transistor-based oscillator/driver circuit designed. The output of the oscillator/driver circuit provided to the Flyback transformer which results in high voltage pulses at the output. The detailed circuit diagram included rectifier of the regulated power supply, oscillator/driver circuits and the Flyback transformer shown in Fig 1(b).

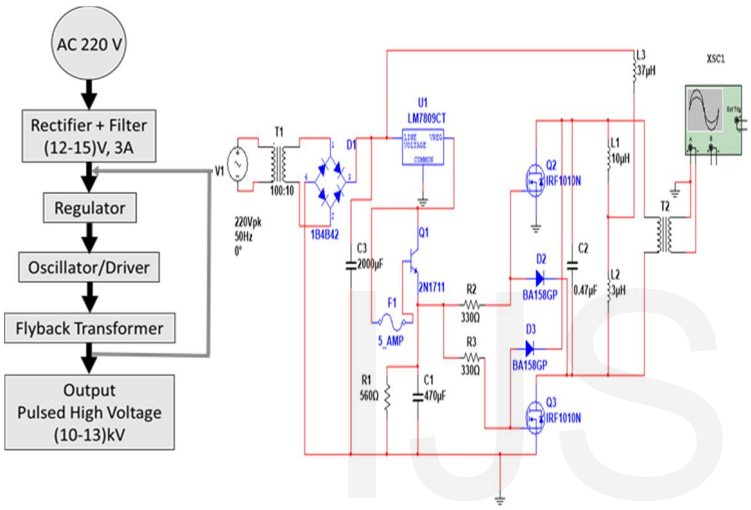

Fig. 1. (a) Block diagram of high voltage power supply, (b) detailed circuit diagram of high voltage source

We have studied systematically the design parameter of this circuit which was implemented later in mounting the electronic parts and fabricating the high voltage power supply. The input 220 V is stepped down to 12 V by a step-down center tapped transformer whose secondary connected to a 1B4B42 bridge rectifier and a 2200 µF smoothing capacitor used as a filter to the output of the bridge rectifier to achieve smoother DC voltage. A voltage regulator LM7805CT used to regulate the voltage and minimize the distortion at the output. The output of the regulator connected to a 2N1711 NPN silicon transistor which acts as a low-speed switch. The output from the 2N1711 used as input signal to the two parallelly connected MOSFETs (Metal Oxide Field Effect Transistor) IRF1010N which acts as a fast switch. Two fast switching plastic rectifiers BA158GP connected between the gain of one IRF 1010N to the drain of other IRF 1010N which improved the switching and rectification efficiency. The fast switching rectifiers have the very low leakage current and capability of high surge forward current. The drain of one of the IRF1010N connected to the one end of the primary coil of Flyback transformer having eight turns and drain of other IRF1010N to the one end of fours turns feedback coil of Flyback transformer. Other ends of primary and feedback coils connect with an inductor of 37.0 uH which connected back to the input of the regulator which made possible to regulate and stabilize the output pulses at the secondary of the flyback transformer as illustrated in the Fig. 1(a, b). A capacitor is attached to the primary coils of the flyback transformer to block the back emf which produced in the flyback transformer that can terminate the operation of the oscillator circuit. The flyback transformer which not only transfers energy from their primary coil to secondary but also stores energy between their coils used to generate high voltage pulses.

3 BLUMLEIN BASED TEA NITROGEN LASER

The equivalent Blumlein based TEA nitrogen laser circuit for the operation of laser discharge channel shown in Fig 2.

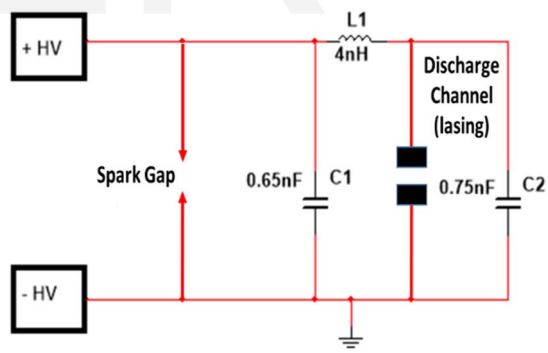

Fig. 2. Equivalent Blumlein based TEA nitrogen laser circuit

We used double sided PCB copper plates in the fabrication of TEA nitrogen laser. The ground plate of copper has the 25.0 cm by 25.0 cm in dimension. The flame resistant (FR-4) used as a dielectric having dielectric constant 4.34 and thickness of 1.6 mm. The area of capacitor "C1" is (11.2 cm×24.0 cm) 268.8 cm^2 and area of capacitor "C2" (13.0 cm× 24.0 cm) 312.0 cm^2 having capacitance 0.65 nF and 0.75 nF, respectively. The laser discharge channel

designed between the two parallel plate capacitors. Therefore, the upper plates of both capacitors are separated by 5.5 mm. The laser discharge channel is designed and fabricated by employing L-Shaped Aluminum electrode (Length = 24 cm Wide =1.5 cm, Thickness =1.0 mm). A copper wire of 18 gauge is attached at the bottom side of both electrodes to produce sufficient pre-ionization and for proper air flow between the electrodes. The laser discharge channel has the width of 2.0 mm and length of 24.0 cm, while at the front and rear ends width increased to 4.0 mm which reduces the arching phenomena. The end edges of electrodes turned into spherical shapes to avoid arching at the both ends. The parallel plate capacitors connected by an inductor of inductance 4.0 uH. The triggering of Blumlein circuit is carried out by the free running spark gap which made up of brass screws whose inner radius 1.0 mm and outer radius 3.0 mm interconnected with the L shape copper electrodes. One end of free running spark gap soldered on the lower copper plate of PCB which acts as a common capacitor plate and another end to the C1. The air between the spark gap is adjustable as it changes by altering the separation between the spark gap electrodes, which adjusted from minimum to the maximum to control and optimize the whole operation of the TEA nitrogen laser system [13].

The output of the prototype high voltage electric pump source connected to the ends of the spark gap. The parallel plate capacitors charged simultaneously through inductor across the spark gap voltage. The free running spark gap acts as a switch, and the voltage difference across the spark-gap surpasses the breakdown voltage of air, the spark appears between the spark gap electrodes which decrease the electrical resistance by ionizing the air. As the spark appears across the spark gap electrodes, the C1 drastically discharges while the inductor opposes the flow of current from C2, consequently leaving the C2 highly charged. Thus, an enormous potential difference appeared between the capacitors across the laser discharge channel. Due to the high potential difference, the strong electric field appeared between the electrodes of the laser discharge channel; consequently, high energetic electrons travel from high potential to low potential. The high energetic electrons make an elastic collision with the air molecules and transfer their energy to the air molecules particularly to the nitrogen gas molecules in the air during their motion. The Nitrogen gas molecules absorb the energy, jumps to higher state and population inversion created between the $C_{3\Pi u}$ and $B_{3\Pi g}$ [24], which behave as upper laser level and lower laser level, respectively. The lifetime of upper laser level is shorter than the lower laser level, therefore the lasing achieved in pulsed mode.

4 OBSERVATIONS AND CHARACTERIZATION

The output of the developed high voltage pump source shown in Fig 3. The high voltage power supply is designed and fabricated to achieve the pulses of 13 kV. We used high voltage probe (PM 9246, Philips Inc.) to measure such a high voltage, which connected to general purpose voltmeter. The multiplication factor for this high voltage probe was 1.38 kV peak-to-peak value. Therefore we measured peak-to-peak ~13kV after correcting with the multiplication factor. We

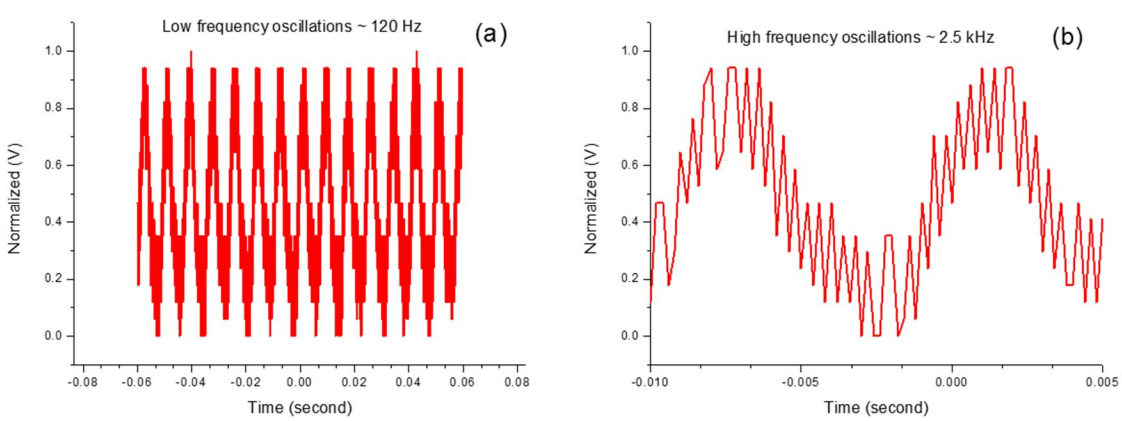

Fig. 3. High voltage output, (a) Low-frequency oscillations, (b) High-frequency oscillations at the output of flyback transformer

observed the oscillatory behavior on the oscilloscope (DS1102E, RIGOL Inc.) at the output, which indicates the repetition rate of the output voltage shown in the Fig. 3. Whereas the Fig 3(a), shows a low-frequency oscillation (~ 120 Hz) at the output, which is the frequency of the oscillator/driver circuit for the flyback transformer. If we magnify the low-frequency oscillations as it shows in Fig 3(b), we observed the super high frequency (~ 2.5 kHz) at the secondary of the flyback transformer, which are the characteristics of the typical flyback transformer. Also, we have studied the charging and discharging of C2, the measured values of charging and discharging time of C2 are 0.46 ms and 9.22 ms respectively as shown in the Fig 4. Therefore the total time for charging and discharging of the capacitor is 9.68 ms, and from this time value, ~103 Hz frequency estimated charging and discharging frequency of C2. The small peaks (Fig 4) observed because of the stray capacitance which appeared while the C2 discharges in the discharge channel of long parallel electrodes during the operation of the laser. Our study and observation show that the lasing action occurs during the discharging of the C2.

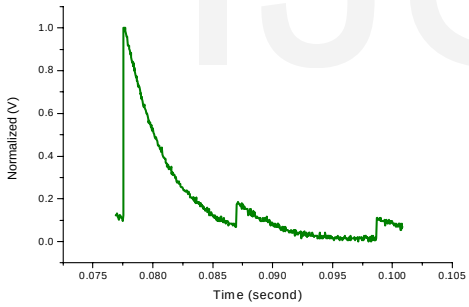

Fig. 4. Charging and discharging of C2

The coherent ultraviolet pulses generated by the TEA nitrogen laser energized by the high voltage pump source characterized by employing the fast photodiode (APD110, Menlo Systems, Inc.) and USB-spectrometer (EPP2000, StellerNet Inc.). The schematic of the setup to characterize the output pulses of the TEA Nitrogen laser shown in Fig 5.

As the TEA nitrogen laser has high gain in air and super-luminescence, therefore no resonator mirrors required. To block the noise in the visible and ultraviolet region because of the spark generated in the discharge channel while lasing and to obtain the central part of the pulse a variable iris mounted 2 cm away from laser discharge channel. The laser pulses from the iris made to pass through the

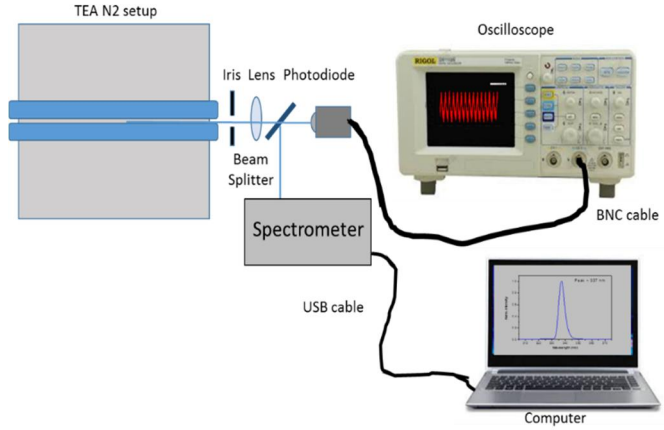

Fig. 5. Schematic setup for the characterization of prototype TEA Nitrogen laser

focusing lens of 5 cm focal length. We used the beam splitter to guide the beam between spectrometer and photodiode. The focusing lens focused the ultraviolet laser pulses on the photodiode which connected to the oscilloscope. The Photodiode signal recorded by the oscilloscope which appeared in the form of an electric pulse as shown in Fig 6. From the Fig 6, 10.3 ns estimated full-width at half maximum (FWHM) value of the measured laser pulse. The shape of the pulse preserved, but we could not obtain the exact value of the pulse duration because of unavailability of the proper and suitable instruments such as oscilloscope over 500 GHz bandwidth, and fast-responding photodiode.

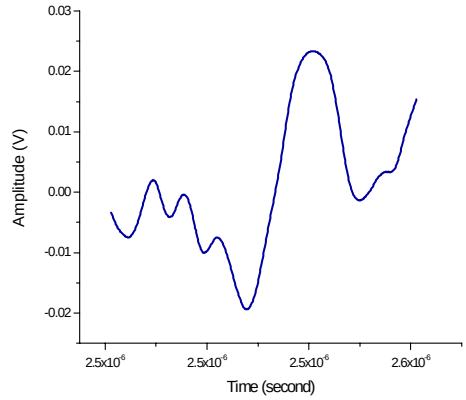

Fig. 6. Pulse measurement by the photodiode

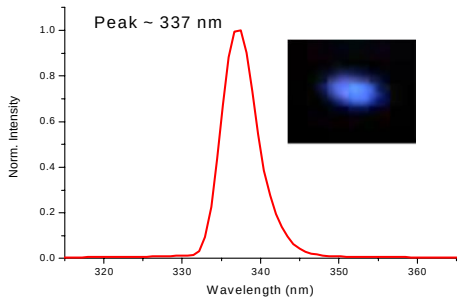

Fig. 7. Spectrum of TEA nitrogen laser, inset digital image of the beam

The output spectrum of the TEA nitrogen laser shown in Fig 7. The spectrum with the center wavelength of ~337.1 and the FWHM of ~2.4 nm acquired by the USB-spectrometer. The pulse spectrum has taken over an average of many shots and data acquired at higher integration time, to achieve smoother spectrum and minimize the electrical noise in the spectrum. The digital image of the emitted laser from the TEA nitrogen also shown in the inset of the Fig 7, which clearly shows the coherent ultraviolet radiation. These results confirmed the emission of the laser in the ultraviolet region.

5 CONCLUSION

A high voltage power supply as a pump source for the TEA nitrogen laser designed, developed, optimized and characterized. 13 kV output pulses generated operating at 120 Hz repetition rate. The copper plates of PCB used as capacitors in the development of Blumlein-based TEA nitrogen laser. The reported low capacitance (1.5 nF) and lower corona, preionization TEA nitrogen laser characterized by a photodiode; the output spectrum obtained averaged over many by employing USB-spectrometer with the center wavelength of ~337.1 nm and the FWHM of ~2.4 nm.

Acknowledgement

The authors acknowledge the financial support from the King Abdulaziz City for Science and Technology (KACST) under the project number M 2-36-2. Further, this research work carried out at the department of Physics & Astronomy, King Saud University, Riyadh, Saudi Arabia.

REFERENCES

[1] M. A. Vazquez and V. Aboites, "High-efficiency low-pressure Blumlein Nitrogen laser", *IEEE J. Quantum Electronics*, vol. 29, issue 8, pp. 2364-2370, 1993.

[2] V. J. Pinto and V. Aboites, "High Efficient Nitrogen laser", Revista Mexicana de Física, vol. 37, issue 3, 391-395, 1991.

[3] D. A. Leonard, "Saturation of the molecular nitrogen second positive laser transition", *Applied Physics Letters*, vol. 7, issue 1, pp. 4-6, 1965.

[4] W. Herden, "Compact high power subnanosecond nitrogen and "open air" lasers at 760 torr", *Physics Letters A*, vol.54, issue 1, pp. 96-98, 1975.

[5] V. J. Pinto, V. Aboites and J. de la Rosa, "N2 MOPA system with coaxial laser amplifier", *Revista Mexicana de Física*, vol. 37, issue 4, pp. 665-670, 1991.

[6] K. Kwek and O. Chi, "A Four Channel TEA N2 laser controlled by a multistage spark gap Institute for Advanced Studies", University of Malaya, 59100 Kuala Lumpur, Malaysia, 1992.

[7] A.S. Provorov, V.V. Salmin, A.B. Salmina, A.A. Fursov, A.V. Stepanenko, A.G. Sokolovich, and R.Y. Olovyannikova, "Pulsed gas lasers with longitudinal discharge and their application in medicine", *Laser physics*, vol. 15, issue 9, pp. 1299-1302, 2005.

[8] M.S. Averin, O.A. Bashutin, E.D. Vovchenko, L. San Wei, D.E. Prokhorovich, A.S. Savjolov, S.A. Savjolov, "A multichannel TEA N2 laser for visualizing pulsed plasma in the nanosecond range", *Instruments and Experimental Techniques*, vol. 47, issue 2, pp. 209-213, 2004.

[9] C.K. Chiang, W.T. Chen, and H.T. Chang, "Nanoparticle-based mass spectrometry for the analysis of biomolecules", *Chemical Society Reviews*, vol. 40, issue 3, pp. 1269-1281, 2011.

[10] H. El Ouazzani, S. Dabos-Seignon, D. Gindre, K. Iliopoulos, M. Todorova, R. Bakalska, and B. Sahraoui, "Novel styrylquinolinium dye thin films deposited by pulsed laser deposition for nonlinear optical applications", *The Journal of Physical Chemistry C*, vol. 116, issue 12, pp. 7144-7152, 2012.

[11] F.A. Al-Agel, "Structural and optical properties of Te doped Ge–Se phase-change thin films: a material for optical storage", *Materials Science in Semiconductor Processing*, vol. 18, pp. 36-41, 2014.

[12] M. 3 Þati, "A full distributed parameter model of a Blumlein-line laser circuit including the effect of time varying spark-gap inductance and resistance", Electrical and Computer Engineering (CCECE), IEEE 27th Canadian Conference on. IEEE, 2014.

[13] C. Zhao and J. Wu, "Modeling of Blumlein Circuit and Calculation of Resistance and Inductance of Laser Plasma", *International Journal of Science, Technology and Society*, vol. 2, issue 6, pp. 196-200, 2014.

[14] V. Aboites, L. Rendón, A. I. Hernández and E. Valdés, "Modeling of the Inductance of a Blumlein Circuit Spark Gap", *In Journal of Physics: Conference Series, IOP Publishing*, vol. 582, issue 1, pp. 012011, 2015.

[15] M. Hussain, M. B. Siddique and T. Imran, "Analysis of transversely electrical excited atmospheric (TEA) nitrogen laser and different parameters of homemade ignition system", *Science International*, vol. 27, issue 6, pp. 5001-5004, 2015.

[16] S. B. Han and S. H. Park, "Evaluation of Discharge Characteristics Followed by the Development of Blumlein pulsed power source", *Journal of the Korean Institute of Illuminating and Electrical Installation Engineers,* vol.24, issue 10, pp. 99-105, 2010.

[17] Z. Liu, K. Van, G. J. J. Winands, E. J. M. Van Heesch and A. J. M. Pemen, "Novel multiple-switch Blumlein generator", *Review of scientific instruments,* vol. 77, issue 3, pp. 033502, 2006.

[18] Y.S. Roh and Y.S. Jin, "Analysis of output pulse of high voltage and nanosecond Blumlein pulse generator", *Journal of Electrical Engineering and Technology*, vol. 8, issue 1, pp. 150-155, 2013.

[19] M. O Twati and A. B. Otman, "Distributed parameter analysis of a Blumlein-line N2 laser", *Optics communications*, vol. 99, issue (5-6), pp. 405-412, 1993.

[20] N. Nayan, M. R. Zahariman, M. F. B. Ahmad, R. A. M. Ali, M. Z. Sahdan and U. Hashim, "Development and application of in-house high voltage power supply for atmospheric pressure plasma treatment system, In Semiconductor Electronics (ICSE), 10th IEEE International Conference on, pp. 596-599, 2012.

[21] M. Hussain and T. Imran, "Design and construction of prototype transversely excited atmospheric (TEA) nitrogen laser energized by a high voltage electrical discharge", *J. of King Saud University-Science*, vol. 27, issue, pp. 233-238, 2015.

[22] A. Hariri, M. Tarkashvand and A. Karami, "Corona-preionized nitrogen laser with variable pulse width", *Review of scientific instruments*, vol. 61 issue 5, pp. 1408-1412, 1990.

[23] S. Sarikhani and A. Hariri, "Modification of nitrogen Townsend ionization coefficient in a N2 laser with a weak corona preionization and high gas pressure using laser output power measurements", *Journal of Optics*, vol.15, issue 5), pp. 055705, 2013.

[24] H. G. Heard, "Ultra-violet gas laser at room temperature", *Nature*, vol. 200, pp. 667-667, 1963.